LiGHT SKY

www.lightsky.com.cn

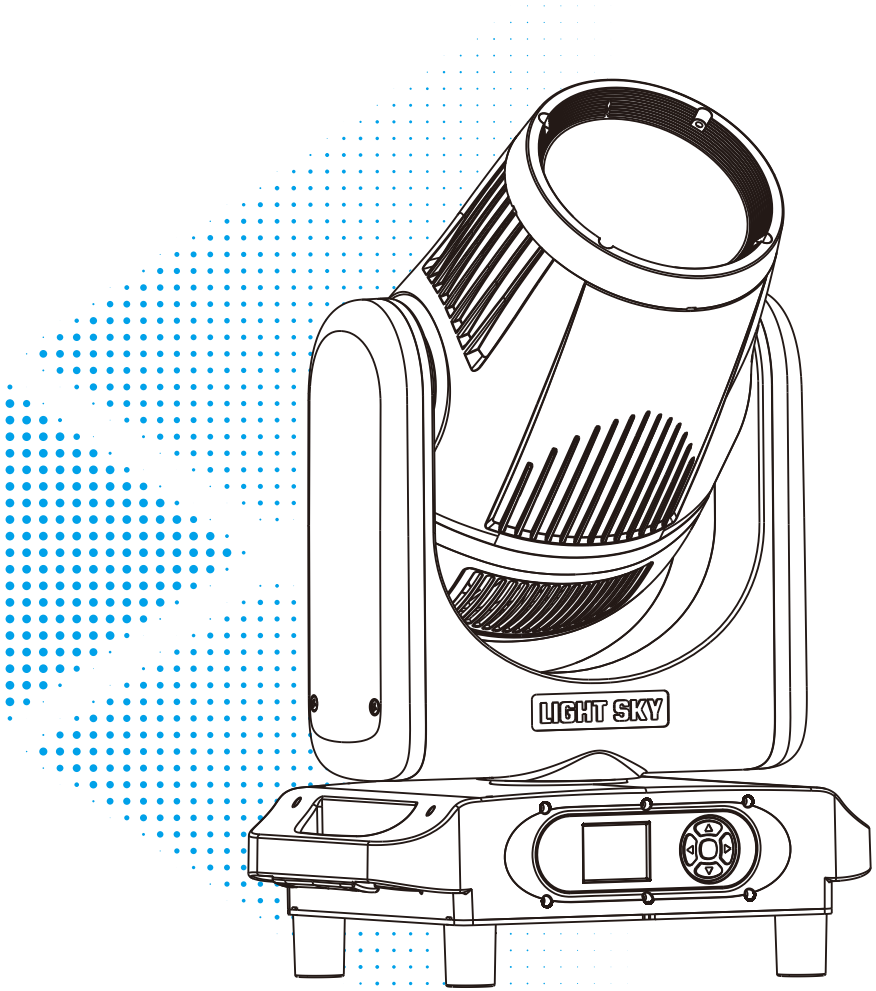

MINI LASER AQUA PRO

User Manual

Please read the instruction carefully before use

Fly Dragon Lighting Equipment Co., Ltd.

Add : NO.4 JINGNENG ROAD 1, HUADU DISTRICT, GUANGZHOU, CHINA.
Tel : 020-61828288 Fax : 020-61828188 Postal Code : 510820
Email : flydragon@lightsky.com.cn

Social Media

LiGHT SKY Wechat

CONTENTS

1. Safety Instructions 2

2. Technical Specifications 5

2.1. Attachment And Size 8

3. Color/Gobo/Prism 9

4. Connection and control 10

4.1. Power supply connection 10

4.2. DMX 512 Connection 11

4.3. Control Panel 12

5. How To Set The Unit 13

5.1. Main Function 13

5.2. Address Setting 16

5.3. DMX 512 Configuration 17

6. Electrical Connection Diagram 20

7. Troubleshooting 21

8. Fixture Cleaning 23

9. Duty exonerative and copyright protectio 23

Congratulations on choosing our company product! We thank you for your custom.

- Please keep in mind that this product, like other products of the company, adheres to the concept of people-oriented design and manufacture, and takes product quality as the foundation.
- We put the interests of customers first, and do our best to meet customer requirements.
- Please read this instruction manual carefully and keep it for future reference. In the case of fully understanding the product information, strictly abide by theUse the instruction manual to ensure that the product is installed, used and serviced correctly and safely.
- Our company is not responsible for any damage to lamps or other performance due to personal failure to follow the instructions during installation, use and maintenance.responsibility.
- Our company reserves the right to modify the manual at any time and without prior notice.

1.Safety Instructions

Please read the instruction carefully which includes important information about the installation, usage and maintenance.

WARNING

Please keep this User Manual for future consultation. If you sell the unit to another user, be sure that they also receive this manual.

The following symbols are used to identify important safety information on the product and in this manual:

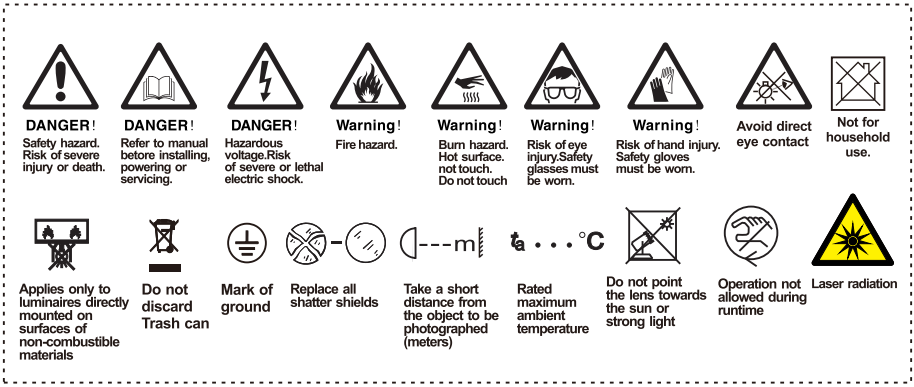

Important:

Damages caused by the disregard of this user manual are not subject to warranty.

The dealer will not accept liability for any resulting defects or problems.

— Unpack and check carefully to ensure that there is no transportation damage before using the unit.

— Do install and operate by qualified operator.

— The light source in this luminaire should be replaced by the manufacturer or its service agent or a similarly qualified person, always cut off the power supply before replacing he light source.

— Do not allow children to operate the fixture.

— Use safety chain when fixing the unit. Handle the unit by carrying its base instead of head only.

— The unit must be installed in a location with adequate ventilation, at least 50cm from adjacent surfaces.
— Be sure that no ventilation slots is blocked, otherwise the unit will be overheated.
— Before operation, ensure that you are connecting this product to the proper voltage in accordance with the specifications in this manual or on the product's specification label.
— It's important to ground the yellow/green conductor to earth in order to avoid electric shock.
— Minimum ambient temperature Ta: -20°C. Maximum ambient temperature Ta: 45°C. Do not operate this product at a lower or higher temperature.
— Do not connect the device to any dimmer pack.
— When the lamp is running, do not place combustible objects next to it. The shortest distance between the device and inflammable and explosive objects or materials is 1m.
— Make sure the power cord is not crimped or damaged; replace it immediately if damaged.
— Unit's surface temperature may reach up to 65°C. Do not touch the housing bare-handedduring its operation.
— Avoid any flammable liquids, water or metal from entering the unit. Once it happens, cut off the mains power immediately.
— Do not operate in a dirty or dusty environment. Do clean the fixture regularly.
— Do not touch any wire during operation as there might be a hazard of electric shock.
— Avoid entanglement of the power cord with other wires.
— The minimum distance to objects/surface must be more than 12 m， Within 12 meters, fixtures must not be aimed directly at each other to prevent damage to internal components.
— In the event of serious operating problem, stop using the unit immediately.
— Never turn on and off the unit time after time.
— The housing, the lenses, or the ultraviolet filter must be replaced if they are visibly damaged.
— Do not open the housing as there are no user serviceable parts inside.
— Do not attempt to operate this unit if it becomes damaged. Do not attempt any repairs yourself. Repairs carried out by unskilled people can lead to damage or malfunction. Please contact the nearest authorized technical assistance center if needed.
— Disconnect this product from its power source before servicing.
— Do use the original packaging if the device is to be transported.
— Avoid direct eye exposure to the light source while the product is on.
— Do not operate this product if you see damage on the housing, shields, or cables. Have the damaged parts replaced by an authorized technician at once.

— Class 1 laser products (IEC 60825-1 2014) - RG3 (IEC 62471-5: 2015).

— Warn! Do not look directly at the light source at work, as it may damage the retina of the eye and cause visual blindness.

— The exposure distance of lighting fixtures to the eyes and skinShould be greater than 45 meters.

— For safety reasons, operators should avoid direct irradiation of the light source of the lamp into areas, with human access before starting to control the lamp.

— No direct exposure to the beam shall be permitted, RG3 IEC 62471 -5:2015.

— Operators shall control access to the beam within the hazard distance or install the product at the height that will prevent spectators eyes from being in the hazard distance.

— CAUTION! Use of controls or adjustments or perfommance of procedures other than those specified herein may result in hazardous radiation exposure.

— The laser safety classification of this product is based on IEC 60825-1: 2014.

— The laser module information is as follows :

Wavelength:	Main wavelength 455nm
Beam divergence:	50°
Maximum output power:	120W
Laser safety level:	CLASS 4

Installation:

The fixture should be fixed on the clamp. Always ensure that the unit is firmly fixed to avoid vibration and slipping off during operation. Ensure that the trussing or area of installation must be able to hold 10 times the weight without any deformation. Always install a safety cable that can hold at least 12 times the weight of the fixture when installing.

Do install and operate by qualified operator. It must be installed in a place where there is out of the reach of people.

2.Technical Specifications

OPTICS

- Light source: 120W laser light source
- Optical angle: 1.1 °
- Optical lens: 128mm high-definition lens
- Color temperature: 10000 K
- Color rendering index: Ra≥70
- Illuminance: 220000 lx @ 10 m
- Laser source life expectancy: 12000 h

(*Laser source life depends on several factors, including but not limited to:environmental conditions, control dimming, power supply and voltage, switchingcycle, fixture mode, etc.)

COLOUR

- Color palette: 12 color chips+white light, capable of achieving bidirectional color rainbow, dual color step gradient (linear movement), color wheel rotating in both directions.
- CMY: Linear CMY Color Mixing System

PATTERN

- Fixed pattern disc: 17 patterns+white light, capable of achieving flowing and shaking effects.

EFFECT

- Soft Light Effect: Independent Soft Light Effect
- Prism: 8 prisms+24 prisms, can rotate independently in both directions, can switch independently, and can be stacked.
- Dimming: 0-100% linear dimming
- Focusing: High precision electric focusing

CONTROL AND PROGRAMMING

- Control channels: 17CH, 19CH, please refer to the channel table for details
- Control protocols: Standard DMX512 protocol, RDM protocol, Art Net protocol, sACN protocol.
- Data connection: Three core or five core signal input/output
- Display: LCD screen

SOFTWARE

- Upgrade software through DMX signal
- Intelligent temperature control ensures the lifespan of laser light sources
- Silent fan, three working modes (high brightness/standard/silent)

X/Y AXIS MOTION ANGLE

- X-axis: 540 ° (8-bit/16bit precision scanning)
- Y-axis: 270 ° (8-bit/16bit precision scanning)
- Reset function with automatic error correction
- Fixed lock: Y-axis lock

POWER SUPPLY AND POWER

- Input voltage: AC 100-240V 50/60Hz
- Maximum power: 233W
- Power factor: 0.996
- Maximum current of the lamp: 2.33A/100V; 1.05A/220V

DIMENSION

- Product size: 329 × 222 × 516mm
- N.W.: 14.3kg
- Carton packaging (default): 405×295×650mm
- G.W.: 18.3 kg
- Flycase Size(4 units): 850x690x735mm
- G.W.:111.9 kg

OTHER

- Protection level: Ip66
- Work environment:- 20℃ ~ 45℃
- Maximum surface temperature of lamp body: 65 ℃
- Hook: Suitable for pipes with a diameter of 38-52 mm

APPROVALS

- The product implementation standard: IEC 60598-1、IEC 60598-2-17
- Approved certifications: CE、RoHs
- The product complies with the following EU directives:
  Low Voltage Directive 2014/35/EU . EMC Directive 2014/30/EU

illumination diagram

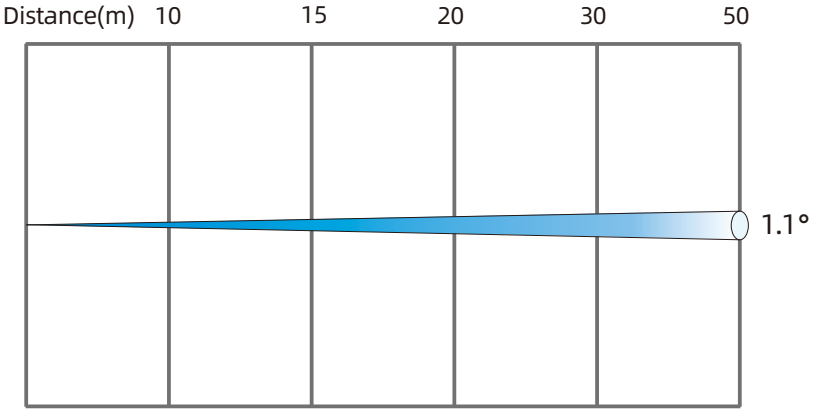

1.1° Lux	220000	97780	55000	24450	8800
diameter(m)	0.2	0.3	0.4	0.6	1.00

2.1.Attachment And Size

Attachment contents-Fig.1

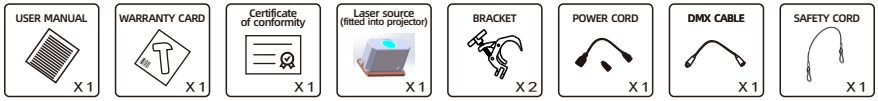

Size-Fig.2-1- Hook version (Unit:mm)

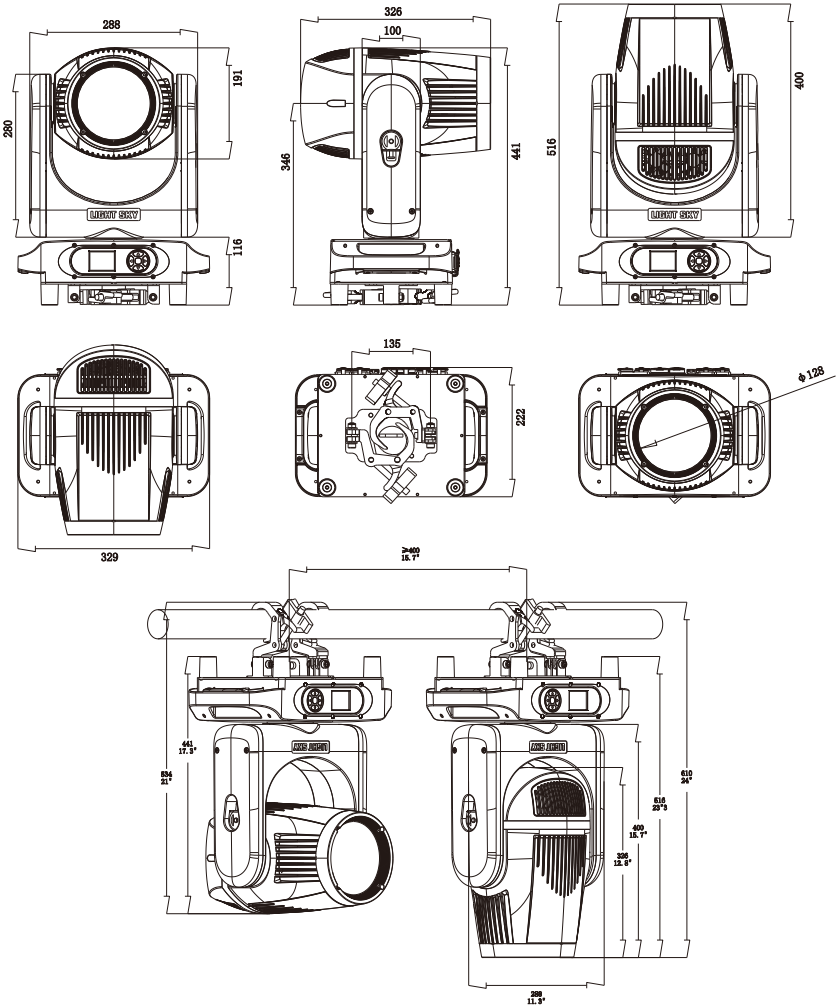

Size-Fig.2-1--Quick-lock version-Optional (Unit:mm)

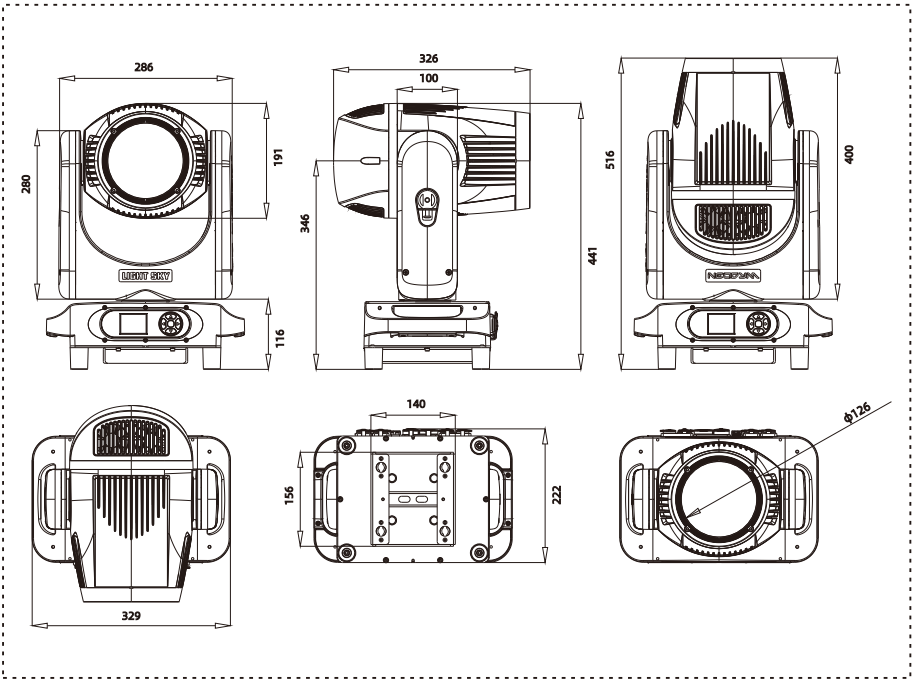

3.Color/Gobo/Prism

CMY+Color





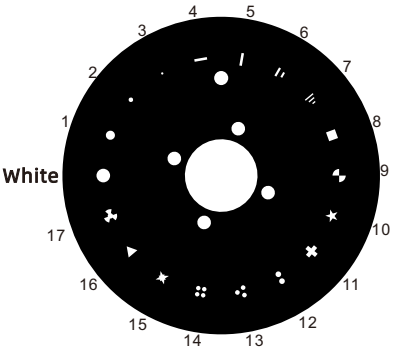

Static gobo wheel

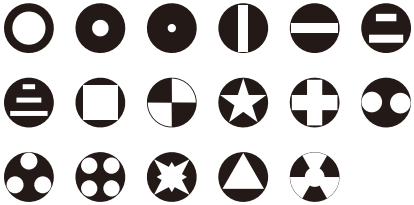

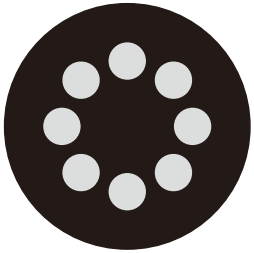

8 Prism

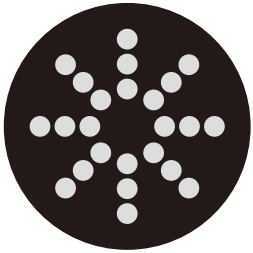

24 Prism

4.Connection and control

4.1.Power supply connection

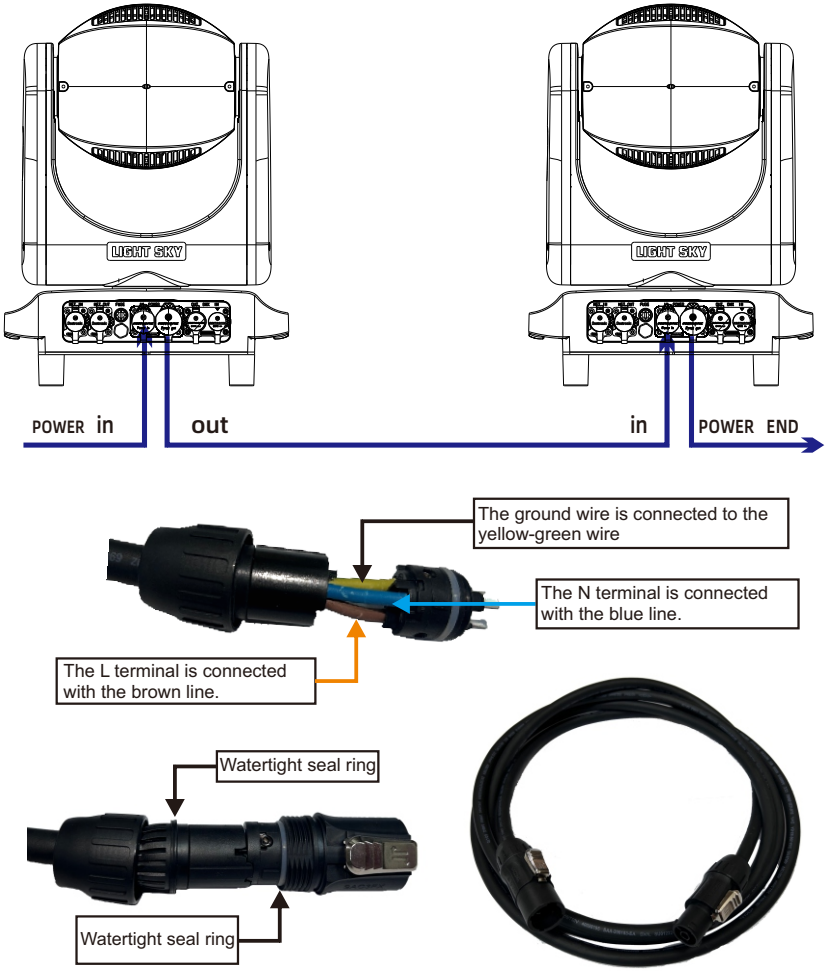

- The bus connecting the power supply must be installed by a qualified professional technician.
- After completing all the above operations and ensuring that it is installed, you can power on the lamp to operate.

4.2.DMX 512 Connection

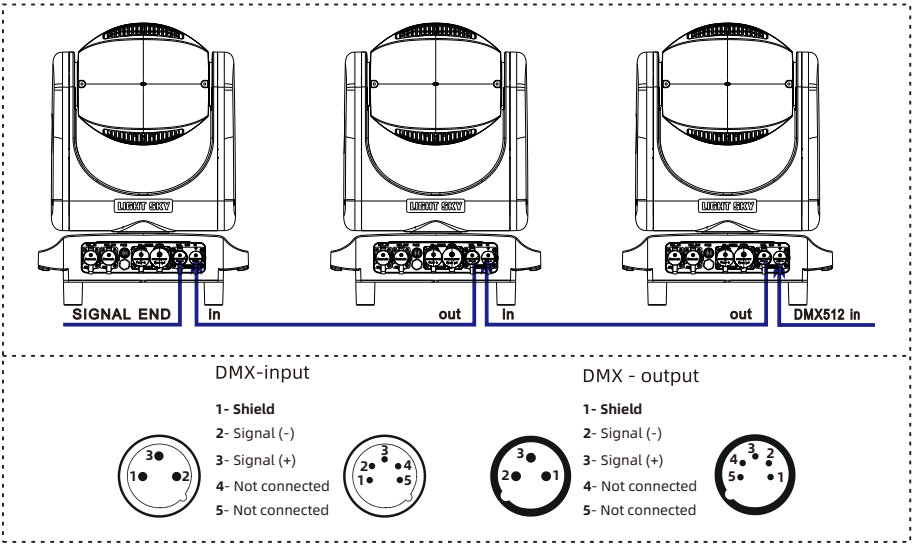

1. At last unit, the DMX cable has to be terminated with a terminator. Solder a 120 Ω 1/4W resistor between pin 2(DMX-) and pin 3(DMX+) into a 3-pin XLR-plug and plug it in the DMX-output of the last unit.

2. Connect the unit together in a "daisy chain" by XLR plug cable from the output of the unit to the input of the next unit. The cable cannot be branched or split to a "Y" cable. DMX 512 is a very high-speed signal. Inadequate or damaged cables, soldered joints or corroded connectors can easily distort the signal and shut down the system.

3. The DMX output and input connectors are pass-through to maintain the DMX circuit, when one of the units' power is disconnected.

4. Each lighting unit needs to have a DMX address to receive the data by the controller. The address number is between 1-512.

5. The end of the DMX 512 system should be terminated to reduce signal errors.

6. 3 pin XLR connectors are more popular than 5 pins XLR.

3 pin XLR: Pin 1: GND, Pin 2: Negative signal (-), Pin 3: Positive signal (+)

5 pin XLR: Pin 1: GND, Pin 2: Negative signal (-), Pin 3: Positive signal (+), Pin4, Pin5 not used.

4.3.Control Panel

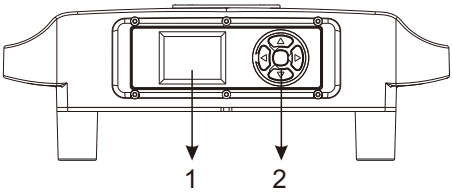

1.Display: To show the various menus and the selected function.

2.Button:

OK	OK confirmation key
▲	UP
▼	DOWN
◀	To the left
▶	To the right

5.How To Set The Unit

5.1.Main Function

The lamp is powered on. When the system initialization and lamp reset are completed, and the standby interface is displayed on the display screen, press OK to enter the preset menu interface. The main functions are as follows:

Main menu	I menu	II menu	III menu	Note
DMX Address	Address	1-512		
	Channel	17CH(Default) / 19CH		
	State	Black(Default)		
		Hold		
	Input Mode	DMX(Default)		ARTNET can only be selected when there is an ARTNET module available
		ARTNET/ARTNET		
		sACN/sACN		
	DMX Address Lock	OFF		
		ON(Default)		
Information	Time	Total Power Time		
		Power Time		
		Total Light Time		
		Light time		
	Temperature	Head Temp		
	Fan Info.	HeadFanVol		
		HeadFan1Sp		
		HeadFan2Sp		
		FocusFanVol		
		FocusFan1Sp		
		FocusFan2Sp		
		BaseFanVol		
		BaseFan1Sp		
	Fixture state	1.MCU(XY) ***		
		2.MCU(LED) ***		
		3.MCU(CMY) ***		
		4.Pan ***		
		5.Tilt ***		
		6.Cyan ***		
		7.Magenta ***		
		8.Yellow ***		
		9.FixGobo ***		
		10.HeadFan1 ***		
		11.HeadFan2 ***		
		12.FocusFan1 ***		
		13.FocusFan2 ***		
		14.BaseFan1 ***		
	RDM UID	3888：xxxxxxxx		
	DMX Live	DMX		
	Software	1.Display Ver. Vxxx		
		2.XY Ver. Vxxx		
		3.LED Ver. Vxxx		
		4.CMY Ver. Vxxx		
		5.ETH Ver. Vxxx		

Main menu	I menu	II menu	III menu	Note
Personal	PanTilt Setting	Pan Invert	OFF (Default)	
			ON	
		Tilt Invert	OFF (Default)	
			ON	
		P/T Rectify	OFF	
			ON (Default)	
		P/T Mode	Normal(Default)	
			Fast	
			Precise	
	Display Setting	Language	EN (Default)	
			ZH	
		Dis. Backlight	OFF (Default)	
			ON	
		Dis. Direction	Forward (Default)	
			Reverse	
		Dis. Blink	OFF	
			ON (Default)	
	Dimmer&Fan Setting	Led Hz	1800Hz	
			3600Hz(Default)	
			7200Hz	
			25000Hz	
		Dimmer Curve	Linear	
			Square (Default)	
			I-Square	
			Scurve	
		Dimmer Speed	Snqp (Default)	
			Fade	
		Fan Mode	HighOutput	
			Standard (Default)	
			Silent	
	Other Setting	CMY Mode	Standard (Default)	
			Theater	
	Ethernet Setting	IP Address	***.***.***.***	This menu can only be displayed when the artnet module is connected
		Mask Address	***.***.***.***	
		Universe Address	0-32767	
		sACN Universe Address	1-63999	
		DHCP	OFF (Default)	
			ON	
		Ethernet To DMX	OFF (Default)	
			ON	
Manual Control	Channel control	1.Pan ***		
	Reset	PanTilt		
		Head Module		
		All		
		1.Pan ***		
		2.Tilt ***		
		3.Cyan ***		
		4.Magenta ***		
		5.Yellow ***		

Main menu	I menu	II menu	III menu	Note
Service	Calibration	6.FixGobo ***		
		7.Focus ***		
		8.Prism1 ***		
		9.Prism1Rot ***		
		10.Prism2 ***		
		11.Frost ***		
		12.Color ***		
		13.Dimmer ***		
	Factory Reset	NO / YES	Password：1111	
	Reset Timers	1.Total Power Time	NO / YES	
		2.Total Light Time	NO / YES	
		1.Power Time	NO / YES	
		2.Light Time	NO / YES	
	Developer			
	Firmware update			
Language				
Test	Test PanTilt			
	Test Head Module			
	Test All			
Rotate Display				

5.2.Address Setting

Enter MENU, select the DMX setting function, select the address code setting, press the OK button to confirm, the current DMX address will be displayed on the display. Use the up/down buttons to select addresses 001~512, and press the OK button to save. Press the OK button to return to the previous menu.

Please refer to the following diagram to address your DMX512 channel for the first 4 units.

Channel mode	Unit **1** Address	Unit **2** Address	Unit **3** Address	Unit **4** Address
17 CH	1	18	35	52
19 CH	1	20	39	58

5.3.DMX 512 Configuration

Please control the fixture by referring to the configurations below

17 CHANNEL	19 CHANNEL	DMX	Function	NOTE
1	1	0--255	**Pan positioning**	Angle: 0-540°
2	2	0--255	**Fine Pan positioning**	Maximal Speed: 2.11S
3	3	0--255	**Tilt positioning**	Angle: 0-270°
4	4	0--255	**Fine Tilt positioning**	Maximal Speed: 1.15S
/	5	0--255	**Speed pan/tilt**	
5	6		**DeviceSet(Hold 3s)**	
		0-25	No function	
		26-30	Reset Head	
		31-35	Reset Pan&Tilt	
		36-40	Reset All	
		41-49	No function	
		50-59	Fan HighOutput mode	
		60-69	Fan Standard mode	
		70-79	Fan Silent mode	
		80-84	Dis.Blink off	
		85-89	Dis.Blink on	
		90-94	CMY Mode:Standard	
		95-99	CMY Mode:Theater	
		100-104	Pan/Tilt Mode Standard	
		105-109	Pan/Tilt Mode Fast	
		110-114	Pan/Tilt Mode Precise	
		115-129	No function	
		130-139	Pan invert on	
		140-149	Pan invert off	
		150-159	Tilt invert on	
		160-169	Tilt invert off	
		170-177	LED frequency 1.8kHz	
		178-185	LED frequency 3.6kHz	
		186-193	LED frequency 7.2kHz	
		194-199	LED frequency 25kHz	
		200-204	Dimmer curve linear	
		205-209	Dimmer curve square	
		210-214	Dimmer curve inv-square	
		215-219	Dimmer curve "S"	
		220-229	Dimmer fast	
		230-239	Dimmer smooth	
		240-255	No function	
6	7	0-255	**Dimmer**	
7	8	0-255	**Dimmer Fine**	
8	9		**Strobe**	
		0-9	Strobe closed	
		10-49	Slow closing, Fast opening, slow → fast	0.5-12HZ
		50-89	Fast closing, Slow opening, Slow → Fast	0.5-12HZ
		90-119	Slow closing, Slow open, Slow → Fast	0.5-12HZ
		120-179	Random strobe,Slow → Fast	1-25HZ
		180-249	Synchronous strobe,slow → fast	1-25HZ
		250-255	Strobe open	
9	10	0--255	**Cyan**	
10	11	0--255	**Magenta**	
11	12	0--255	**Yellow**	

17 CHANNEL	19 CHANNEL	DMX	Function	NOTE
			Virtual ColorWheel	
		0-5	White	
		6-15	White + Color1	
		16-25	Color1	
		26-35	Color1 + Color2	
		36-45	Color2	
		46-55	Color2 + Color3	
		56-65	Color3	
		66-75	Color3 + Color4	
		76-85	Color4	
		86-95	Color4 + Color5	
		96-105	Color5	
		106-115	Color5 + Color6	
12	**13**	116-125	Color6	
		126-135	Color6 + Color7	
		136-145	Color7	
		146-155	Color7 + Color8	
		156-165	Color8	
		166-175	Color8 + Color9	
		176-185	Color9	
		186-195	Color9 + Color10	
		196-205	Color10	
		206-215	Color10 + Color11	
		216-225	Color11	
		226-235	Color11 + Color12	
		236-245	Color12	
		246-255	color wheel shake slow to fast	0.2-5HZ
			FixgoboWheel	
		0-8	Open	
		9-11	FixGobo 1	
		12-14	FixGobo 2	
		15-17	FixGobo 3	
		18-20	FixGobo 4	
		21-23	FixGobo 5	
		24-26	FixGobo 6	
		27-29	FixGobo 7	
		30-32	FixGobo 8	
		33-35	FixGobo 9	
		36-38	FixGobo 10	
		39-41	FixGobo 11	
		42-44	FixGobo 12	
		45-47	FixGobo 13	
		48-50	FixGobo 14	
		51-53	FixGobo 15	
		54-56	FixGobo 16	
		57-59	FixGobo 17	
13	**14**	60-63	FixGobo1shake,slow to fast	Speed：0.2->10 HZ
		64-67	FixGobo2shake,slow to fast	Speed：0.2->10 HZ
		68-71	FixGobo3shake,slow to fast	Speed：0.2->10 HZ
		72-75	FixGobo4shake,slow to fast	Speed：0.2->10 HZ
		76-79	FixGobo5shake,slow to fast	Speed：0.2->10 HZ

17 CHANNEL	19 CHANNEL	DMX	Function	NOTE
		80-83	FixGobo6shake,slow to fast	Speed：0.2->10 HZ
		84-87	FixGobo7shake,slow to fast	Speed：0.2->10 HZ
		88-91	FixGobo8shake,slow to fast	Speed：0.2->10 HZ
		92-95	FixGobo9shake,slow to fast	Speed：0.2->10 HZ
		96-99	FixGobo10shake,slow to fast	Speed：0.2->10 HZ
		100-103	FixGobo11shake,slow to fast	Speed：0.2->10 HZ
		104-107	FixGobo12shake,slow to fast	Speed：0.2->10 HZ
		108-111	FixGobo13shake,slow to fast	Speed：0.2->10 HZ
		112-115	FixGobo14shake,slow to fast	Speed：0.2->10 HZ
		116-119	FixGobo15shake,slow to fast	Speed：0.2->10 HZ
		120-123	FixGobo16shake,slow to fast	Speed：0.2->10 HZ
		124-127	FixGobo17shake,slow to fast	Speed：0.2->10 HZ
		128-190	FixGoboWheel CW fast to slow	Speed：120->0 RPM
		191-192	Stop	
		193-255	FixGoboWheel CCW slow to fast	Speed：0->120 RPM
			Prism	
		0-63	Prism out	
14	**15**	64-127	Prism1	
		128-191	Prism2	
		192-255	Prism1 + Prism2	
			PrismRot	
		0-127	Prism indexing	
15	**16**	128-190	Forwards prism rotation from fast to slow	Speed：110->0 RPM
		191-192	Stop	
		193-255	Backwards prism rotation from slow to fast	Speed：0->110 RPM
			Frost	
16	**17**	0-127	Frost Out	
		128-255	Frost In	
17	**18**	0-255	**Focus8bit**	
/	**19**	0-255	**FocusFine16bit**	

6.Electrical Connection Diagram

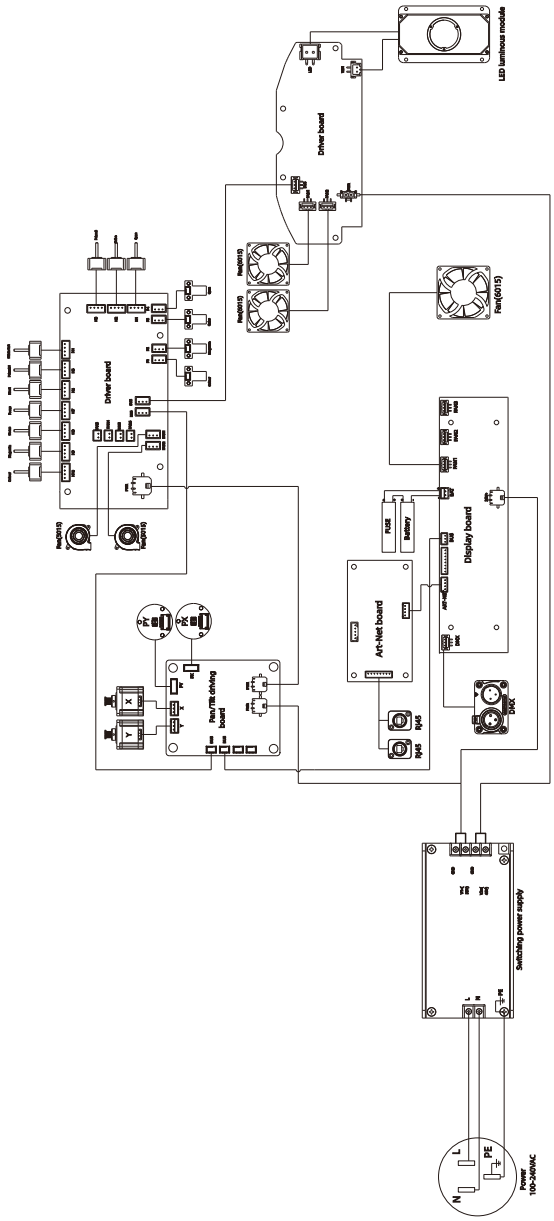

7.Troubleshooting

The following are common faults of lamps and corresponding solutions. Faults that cannot be repaired by yourself should be handled by professionally qualified personnel. Disconnect the power supply to the lamp during maintenance!

● The light source is not bright
- Check that a suitable light source is installed for the luminaire.
- Check whether the power supply connection of the lamp or the control switch is in poor contact.
- Check whether the light source has reached the end of its service life or is damaged, and replace it with a high-quality light source of the same specification.
- Measure whether the power supply is insufficient.
- Check whether the light source has not cooled down completely due to abnormal operation. Let the lamp cool down for more than 15 minutes to allow the light source to cool down. After returning to the normal start-up range, turn the power on again and it can be used normally.
- Check whether the DMX512 controller sends a command to turn on the light source.
- Check whether the light source and trigger circuit are disconnected or defective.
- Check whether the wiring terminals on the internal trigger are in poor contact and tighten the plug.
- Check the "Fan Speed and Voltage" in the "Basic Information" menu to see if the speed of FAN1/FAN2/FAN3 is above 500RPN. If it is below 500RPM, the light source will not light up. Replace the fan with the same specification.
- Check whether the over-temperature protection temperature switch inside the lamp is damaged. Go to the menu "Basic Information" and select "Equipment Temperature" to check - whether the temperature measuring plate shows that the temperature is too high or there is no temperature display.

● The beam appears dim and uneven
- The light source may have reached the end of its service life and does not emit enough light. Replace it with a light source of the same specification.
- Check whether there is dust accumulated in the optical part and clean it.
- Measure whether the power supply is insufficient.
- Finely adjust the screw device used to change the height of the lamp until the ideal light is achieved. Enter the menu "Service Options" and select "Calibration" to enter color and pattern adjustment, which can be adjusted to the center.

● The projected image is blurry
- Check whether the DMX512 controller channel value corresponding to the electronic focus system is suitable for the current projection distance.
- Check whether the mechanical part of the focusing system is stuck, remove the dust and add antifreeze and temperature-resistant lubricating oil.

● The light source of the lamp works intermittently
- Check whether the fan is running normally or is blocked by dust and paper debris.
- Check whether the inlet and outlet cooling air vents are blocked by dust.
- Check whether the lamp has reached the end of its service life.

- Check whether the power supply is insufficient, and whether the power switch and wiring are in poor contact or aging.
- Check whether the over-temperature protection temperature switch inside the lamp is damaged.

● Although it emits light, the lamp does not accept instructions from the controller

- Check whether the digital start address value and function options of the lamp are correct.
- Check whether the connection of the communication control line is correct. The communication line is too long or has been interrupted.
- Check whether the control equipment fails and whether the signal amplifier connected in series fails.
- Check whether the communication line is too long or if other devices interfere with each other.
- Optimize wiring, shorten the length of control signal lines, and route high-voltage and low-voltage lines separately
- Add signal amplifier isolator.
- The signal line is made of high-quality shielded twisted pair (impedance characteristic is 75Ω), and the signal terminal resistor is connected at the end of the lamp.
- Check that the circuit board communication IC or CPU is burned out because the bulb performs an abnormal operation when it is not completely cooled, causing the instantaneous ultra-high voltage leakage generated by the trigger, and replace the PCB board.

● The lamp cannot be started

- Check whether the power supply parameters match the lamps.
- Check whether the fuse at the light fixture's power input is blown.
- Check that the lamp has poor contact or falls off due to extrusion deformation, vibration of internal parts, moisture, etc. during long-distance transportation.
- Check whether the internal wires and connectors of the lamp are desoldered or loose.
- Check whether the electrical components of the lamp (such as power switch, transformer, ballast, capacitor, varistor, filter, power supply PCB board, motor control PCB board, etc.) are loose, short-circuited, burned out, etc.

● Some functions of the lamp cannot accept controller instructions

- Check whether the control device sends correct action instructions for these functions.
- Check whether the mechanical parts corresponding to these functions are loose or deformed.
- Check whether the motor sockets corresponding to these functions are loose or the corresponding driver chips are burned out.
- Check whether the motor wires corresponding to these functions are broken at the corners.
- Check whether the motors corresponding to these functions are damaged.

● During operation, the x or Y direction of the lamp does not move normally

- Click the previous step to check one by one.
- Check whether the corresponding drive belts in the X and Y directions of the lamp are detached or broken.
- Check whether the data feedback receiver (photoelectric sensor) corresponding to the X and Y directions in the lamp is damaged.
- Restart the computer and reset it once.

8.Fixture Cleaning

It is absolutely essential that the fixture is kept clean to ensure the maximum light-output and allow the fixture to function reliably throughout its life. The fixture must be cleaned regularly to avoid dust, dirt and smoke-fluid residues building up on or within the fixture. The cleaning frequency depends on the application environment. Clean the fixture immediately if the dust enters it to avoid damage to the optical lens due to excessive dust.

- A soft lint-free cloth moistened with any good glass cleaning fluid is recommended, under no circumstances should solvents be used.
- Always dry the parts carefully.
- Clean the external optical lens at least every 20 days and the internal optical lens every 30 days.



CAUTION ! ! !

Disconnect from mains before starting maintenance operation.

9.Duty exonerative and copyright protectio

- Light source belongs to consumption products, not within the scope of warranty.
- The manufacturer shall not bear any responsibility for any damage caused by failure to operate in accordance with this instruction.
- The manufacturer reserves the right of final interpretation for all information in this manual. For any questions, please refer to the official website.
- All the information in this manual shall not be copied without permission.
- The data contained in this statement are subject to change in the future without prior notice.